TIMBERWOLF

Wood & Pellet

ECONOMIZER™

BIOMASS PRODUCTS

ABOUT TIMBERWOLF® FIREPLACES

World Recognition for Quality

It all began in 1976 when a small steel fabrication business launched by Wolfgang Schroeter, started manufacturing steel railings in Barrie, Ontario, Canada. At that time, no one could imagine the incredible future that lay ahead for Wolf Steel Ltd.

Since the first wood stove rolled off the production line over 36 years ago, Wolf Steel's commitment was to be distinctive and successful in everything they do. The original stove featured a solid cast iron two-door design and was produced in a one thousand square foot manufacturing facility. By 1981, they unleashed the first single glass door with Pyroceram high temperature ceramic glass - a first in the industry. This was the first of many milestones for Wolf Steel Ltd. and over the next few years, the demand for these wood stoves grew beyond Ontario's borders to the rest of Canada and into the United States.

Wolf Steel works with its customers designing and implementing features sought after by discriminating consumers around the world. Time after time they have led the way with new and innovative technology: Innovative engineering and design, advanced manufacturing techniques, dedicated customer service, outstanding product quality and superior warranties distinguish Wolf Steel Ltd. from its competitors.

Wolf Steel is an ISO9001 - 2008 registered company and operates with 1,400,000+ square feet of manufacturing space and over 1,000 employees. North America's largest privately owned manufacturer of quality wood and pellet inserts, stoves and furnaces.

Timberwolf's commitment to producing quality products combined with honest, reliable service has proven to be a successful framework to ensuring the continued rapid growth of the company.

The Philosophy:

Wolf Steel Ltd. cares about the environment in which we all live. Part of our commitment is to consider the overall impact of Timberwolf® products on the environment. Factors such as design, production and even recyclable materials are all important considerations in creating EcoGreen products. At Wolf Steel Ltd., we pride ourselves in paying close attention to these important factors.

The Product:

Timberwolf® wood burning products are designed to meet EPA (Environmental Protection Agency) clean burning emission standards. The development of products which burn other alternate renewable fuels are continually being explored by our research and development team. Wolf Steel Ltd. manufactures EcoGreen products to provide our customers with the utmost in comfort and safety both in their homes and in the environment. Wolf Steel Ltd. was the first manufacturer to recognize and promote Zone Heating as a unique performance benefit that is provided by hearth products. Both non and renewable natural resources are better utilized by heating only the specific "occupied" area of the home. Heating your home with a Timberwolf® EPA (Environmental Protection Agency) approved insert, stove or furnace releases no more carbon dioxide than a dying tree would lying on the forest floor. In fact, when the entire carbon cycle is considered, a Timberwolf® EPA approved product heats your home more efficiently and with less impact on the environment than any other heating fuel option. TPS35 and TPI35 pellet units are EPA certified as exempt.

The Manufacturing Process:

Wolf Steel Ltd.'s continuous improvement program includes a team specifically dedicated to reducing waste and improving our "green" endeavors.

The results speak for themselves:

- Utilizing environmentally friendly chemicals in the production process while phasing out unfriendly ones
- Switching to citrus based, biodegradable cleaning agents to degrease steel in place of mineral based cleaners
- Over 95% of all finished goods are made with materials which can be recycled such as steel and glass
- Converting from hydraulic to environmentally friendly electrical equipment
- Introducing natural binding agents as an alternative to silica in our fibre products
- Motion sensing, high efficiency warehouse lighting conserves electricity
- Heating portions of the manufacturing facility with solar and biomass renewable energy heating technology

Go Green With Timberwolf®

The Future:

In addition to the use of recycled packaging materials, reusable containers and partnering with suppliers who practice similar Eco-Friendly philosophies, Wolf Steel Ltd.'s carbon footprint is continually being monitored and reduced, protecting the environment for you, our customers and future generations.

The Timberwolf Economizer EPA wood stoves provide an economical solution to rising costs of home heating. These clean burning, cost effective stoves deliver the reliable heat you need. Outstanding efficiencies, a solid cast iron arched door and an impressive viewing area make Timberwolf stoves a perfect choice for your home or cottage. Available in three sizes to suit your specific heating requirements.

ECONOMIZER™ EPA WOOD BURNING STOVES

2100

Wood Burning Stove shown with optional leg and ash pan kit

Outstanding
85.5%
Efficiency Rating

2200

Wood Burning Stove shown with optional pedestal and ash pan kit

Outstanding
86%
Efficiency Rating

2300

Wood Burning Stove shown with standard pedestal and ash pan kit

Outstanding
83.9%
Efficiency Rating

- EPA Certified
- All stoves come standard with a fully refractory lined firebox and painted black cast iron door
- Conveniently located air control lever
- Optional blower kit
- Optional ash pan kit (ash pan with lid included with 2300)
- Optional leg or pedestal kit (pedestal included with 2300)

Model	BTU Heat Output (high burn)*	Firebox Capacity (cu. ft.)	Area Heated (sq. ft.)**	Burn Time (hours)	Log Size (max)	Emissions (grams per hour)	Flue Diameter Top	Blower Kit Available
2100	52,000	1.5	500 - 1,500+	6	18"	3.9	6"	Yes
2200	65,000	1.9	800 - 2,000+	8	18"	3.6	6"	Yes
2300	85,000	3	1,000 - 3,500+	12	20"	2.8	6"	Yes

*Wolf Steel Ltd. own test results showing realistic BTU's using hardwood logs with regular refueling. Heat output will differ on chimney draft as well as type, moisture content and size of wood.
**Figures may vary with individual conditions such as floor plan layout, insulation value/heat loss of the house, geographical location and firewood used.

TIMBERWOLF

Transform your masonry fireplace into an efficient, clean burning and cost-effective heating source with Timberwolf's EPI22 wood burning insert. The large firebox design accommodates 18" logs and allows for a long eight hour burn time.

ECONOMIZER™ EPA WOOD BURNING INSERT

EPI22

Wood Burning Insert

Outstanding
86%
Efficiency Rating

- EPA Certified
- Large ceramic glass viewing area
- Minimum fireplace opening: 25 ⅞"w x 22"h x 14"d
- Painted black cast iron door included
- Dual blower system included
- Includes a five piece painted black flashing with 3 ½" depth adjustment for installation versatility

Model	BTU Heat Output (high burn)*	Firebox Capacity (cu. ft.)	Area Heated (sq. ft.)**	Burn Time (hours)	Log Size (max)	Emissions (grams per hour)	Flue Diameter Top	Blower Kit Available
EPI22	65,000	1.9	800 - 2,000+	8	18"	3.6	6"	Included

*Wolf Steel Ltd. own test results showing realistic BTU's using hardwood logs with regular refueling. Heat output will differ on chimney draft as well as type, moisture content and size of wood.
**Figures may vary with individual conditions such as floor plan layout, insulation value/heat loss of the house, geographical location and firewood used.

Designed for efficiency, performance and to provide an economical heating source, the TPS35 pellet stove and TPI35 pellet insert deliver comfortable heat up to 2,000 sq. ft. With a maximum of 30 hours burn time, you enjoy minimal maintenance and less refueling.

ECONOMIZER™ PELLET STOVE AND INSERT

TPS35

Pellet Burning Stove

Outstanding
76.3%
Efficiency Rating

- EPA Exempt
- Digital control panel
- Painted black cast iron door & pedestal included
- Certified for 50/50 mix of pellets and corn
- Optional hopper extensions available (increases pellet capacity up to 160 lbs)

TPI35

Pellet Burning Insert

Outstanding
76.3%
Efficiency Rating

- EPA Exempt
- Digital control panel
- Painted black cast iron door included
- Certified for 50/50 mix of pellets and corn
- Painted black flashing with 2" depth adjustment for installation versatility (sold separately)
- Minimum fireplace opening: 22"w x 21"h with adjustable depth: 10 ½" to 12 ½"

Model	BTU Heat Input (low-high)	Hopper Capacity	Area Heated (sq. ft.)**	Burn Time (hours)	Flue Diameter	Heat Exchanger	120 CFM Blower Kit
TPS35	12,750 - 38,250	45 lbs	Up to 2,000+	30	3"	Included	Included
TPI35	12,750 - 38,250	45 lbs	Up to 2,000+	30	3"	Included	Included

TIMBERWOLF

**Figures may vary with individual conditions such as floor plan layout, insulation value/heat loss of the house, geographical location and pellets used.

High efficiency, high quality and state-of-the-art engineering are the key elements behind our Timberwolf® wood burning room furnace. The TF100 is designed as a wood burning "stand alone" furnace and with its Timberwolf® 2200 wood stove firebox it operates like a stove and can be used in a room setting.

ECONOMIZER™ WOOD BURNING ROOM FURNACE

TF100
Wood Burning Furnace

Outstanding
86%
Efficiency Rating

- Heats from 800 to 1,800 sq. ft.
- Firebox Capacity (cu.ft.) - 1.9
- Blower with variable speed switch - 300-600 CFM
- Glass door with airwash system
- Compact size: 29"w x 45"h x 29"d
- Cleaner combustion made possible by four separate stainless steel secondary air tubes
- Convenient leveling legs
- Conveniently located air control lever
- Optional blower air filter kit

Model	BTU Heat Output (high burn)*	Firebox Capacity (cu. ft.)	Area Heated (sq. ft.)**	Burn Time (hours)	Log Size (max)	Emissions (grams per hour)	Flue Diameter Top	Blower Kit Available
TF100	65,000	1.9	800 - 1,800	8	18"	3.6	6"	Included

*Wolf Steel Ltd. own test results showing realistic BTU's using hardwood logs with regular refueling. Heat output will differ on chimney draft as well as type, moisture content and size of wood.
**Figures may vary with individual conditions such as floor plan layout, insulation value/heat loss of the house, geographical location and firewood used.

TIMBERWOLF

Stoves and Furnace Clearances to Combustibles

2100 & 2200	SINGLE WALL CONNECTOR	DOUBLE WALL CONNECTOR
SIDEWALL (A)	19"	19"
SIDEWALL TO FLUE (B)	28 7/8"	28 7/8"
BACKWALL (C)	17 ½"	12 ½"
BACKWALL TO FLUE (D)	21"	16"
CORNER (E)	11"	7"
2300	**SINGLE WALL CONNECTOR**	**DOUBLE WALL CONNECTOR**
SIDEWALL (A)	22"	22"
SIDEWALL TO FLUE (B)	31 ¾"	31 ¾"
BACKWALL (C)	12"	12"
BACKWALL TO FLUE (D)	15 ½"	15 ½"
CORNER (E)	8"	8"

Pellet Stove Clearances to Combustibles

TPS35	
SIDEWALL (A)	6"
BACKWALL (C)	3"
CORNER (E)	2"

TF100	SINGLE WALL CONNECTOR	DOUBLE WALL CONNECTOR
SIDEWALL (A)	17 3/8"	17 3/8"
SIDEWALL TO FLUE (B)	28 7/8"	28 7/8"
BACKWALL (C)	13"	8"
BACKWALL TO FLUE (D)	21"	16"
CORNER (E)	11"	7"
CEILING (F)	90"	84"
FRONT (G)	48"	48"
FLOOR (H)	7/8"	7/8"

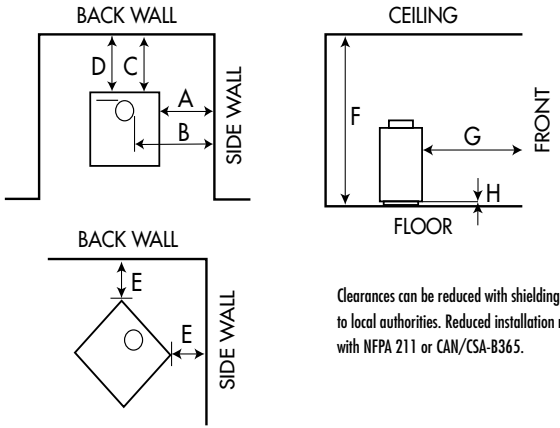

Clearances can be reduced with shielding acceptable to local authorities. Reduced installation must comply with NFPA 211 or CAN/CSA-B365.

Insert Minimum Clearance To Combustibles - EPI22, TPI35

	EPI22	TPI35
SIDEWALL (A)	16"	8"
MANTEL (B)	30"	8"
TOP FACING (C)	22"	6 3/8"
SIDE FACING (D)	10"	6"
HEARTH FRONT (E)	22"	6"
HEARTH SIDE (F)	8"	6"
OBJECTS IN FRONT OF INSERT (G)	48"	-

EPI22 - Minimum fireplace opening: 25 7/8"w x 22"h x 14"d

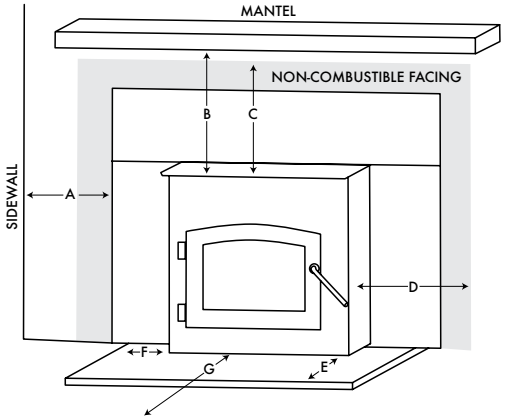

Minimum Floor Protection

MODEL	FRONT (I)	SIDES (J)	BACK (K)
2100/2200/2300	18" (CAN)	8"	8"
	16" (US)		
TPS35	6"	6"	3"
TF100	18" (CAN)	8"	8"
	16" (US)		

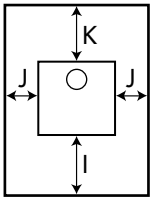

NOTE: If a section of horizontal chimney connector is used, floor protection is required under the chimney connector and 2" beyond each side.

You may decrease the minimum clearances to combustible materials with permanently installed heat radiation shields between the walls or the ceiling and the appliance. All shielding must be acceptable to local authorities.

Dimensions

Stoves

Illustration is based on the TPS35 and is for reference only, chart below reflects all Timberwolf® wood and pellet stove dimensions.

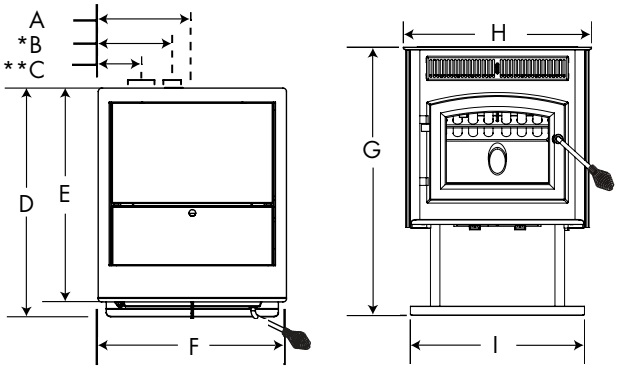

Furnace

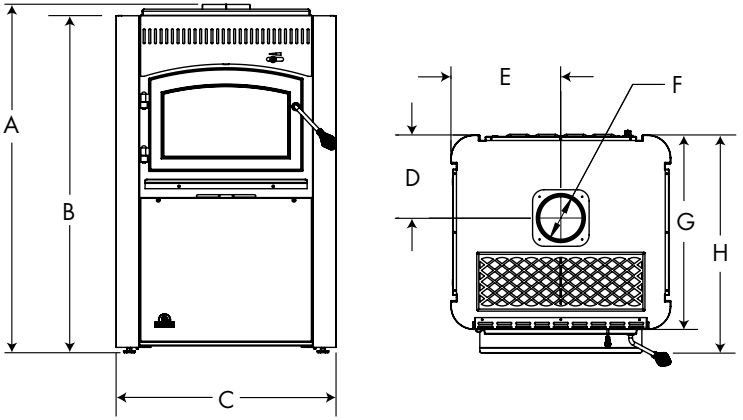

Stoves	A	*B	**C	D	E	F	G	H	I
2100 (Leg Model)	13"	-	-	21 5/8"	19 3/4"	-	31 1/2"	26"	-
2200 (Pedestal Model)	13"	-	-	24 5/8"	22 3/4"	-	31 3/8"	26"	-
2300	12 3/4"	-	-	31"	29 1/8"	-	31 3/4"	25 3/8"	-
TPS35	10 5/8"	8 1/2"	5 5/8"	25 7/8"	24 1/4"	21 1/4"	30 5/16"	21 1/4"	19 11/16"

Furnace	A	B	C	D	E	F	G	H
TF100	46 3/16"	44 11/16"	29 1/8"	11"	14 9/16"	6"	25 13/16"	28 7/8"

Measurements to be used as a guide only. Consult your owner's manual for complete and up-to-date installation instructions and proper clearances.

Dimensions

Inserts

Illustration is based on the TPI35 and is for reference only, chart below reflects all Timberwolf® wood and pellet insert dimensions.

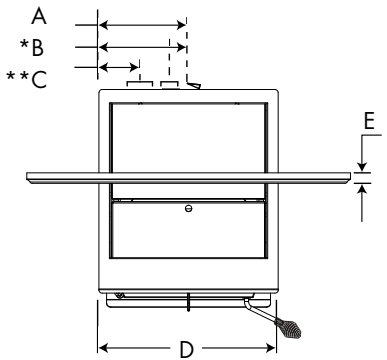

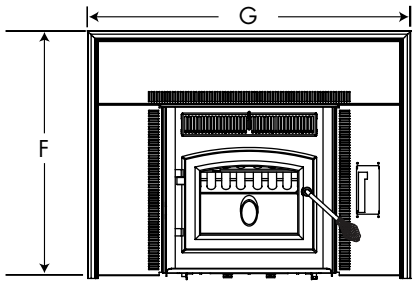

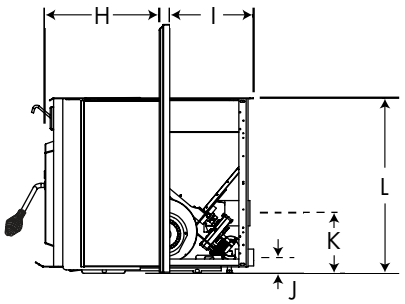

Inserts	A	*B	**C	D	E	F	G	*H	**I	J	K	L
EPI22	-	-	-	25 3/8"	-	31"	43"	†	††	-	-	21 3/4"
TPI35	10 5/8"	8 1/2"	5 5/8"	21 1/4"	1 1/4"	29 3/8"	38 3/8"	†††	††††	1 7/8"	7 1/8"	20 13/16"

* Centre line of air intake

** Centre line of exhaust

† Adjustable 4" to 7 ½"

†† Adjustable 14" to 17"

††† Adjustable 11" to 13"

†††† Adjustable 10 ½" to 12 ½"

Measurements to be used as a guide only. Consult your owner's manual for complete and up-to-date installation instructions and proper clearances.

103 Miller Drive, Crittenden, Kentucky, USA 41030
24 Napoleon Road, Barrie, Ontario, Canada L4M 0G8
7200 Trans Canada Highway, Montreal, Quebec, Canada H4T 1A3

Tel: 705-721-1212 Fax: 705-722-6031

timberwolffireplaces.com

CERTIFIED UNDER U.S. ENVIRONMENTAL PROTECTION AGENCY (E.P.A.) JULY 1990 40 C.F. R. PART 60 AND THE OREGON DEPARTMENT OF ENVIRONMENTAL QUALITY (D.E.Q.) PARTICULATE EMISSION STANDARDS BY EEMC (2300). THESE STOVES AND INSERTS HAVE BEEN TESTED AND LISTED TO EITHER EEMC, OMNI AND/OR INTERTEK STANDARDS: ASTM E 1509, CSA B366.2, ULC S627, ULC 5628, UL 1482, ULC/ORD C1482M-90. Consult your owner's manual for complete installation instructions and check all local and national building codes. All specifications and designs are subject to change without notice to allow for on-going product improvement. Images may not be exactly as shown. © Wolf Steel Ltd.

Authorized Dealer

Printed in Canada
ADBR480 - 02/14